Computer Networks

Aftab Alam

November 21, 2024 (Thursday)

Lecture # 26

Data Link Layer

Reliable Transmission Over Unreliable Physical Link

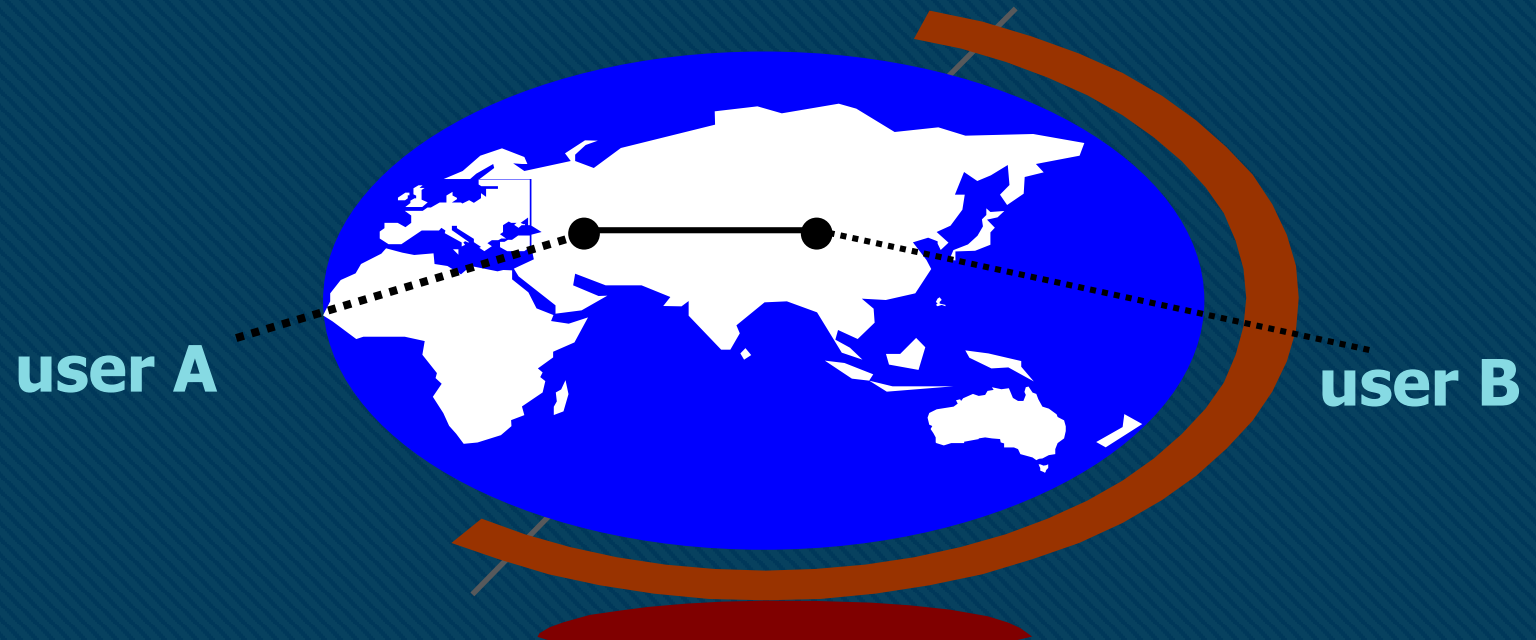

Note

The Hamming distance between two words is the number of differences between corresponding bits.

Note

The minimum Hamming distance is the smallest Hamming distance between all possible pairs in a set of words.

Note

To guarantee the detection of up to s errors in all cases, the minimum Hamming distance in a block code must be $d_{min} = s + 1$.

Note

To guarantee correction of up to *t* errors in all cases, the minimum Hamming distance in a block code must be $d_{min} = 2t + 1$.

Note

In a linear block code, the exclusive OR (XOR) of any two valid codewords creates another valid codeword.

Example

Let us see if the two codes we defined in Tables belong to the class of linear block codes.

1. The scheme in 1st Table is a linear block code because the result of XORing any codeword with any other codeword is a valid codeword. For example, the XORing of the second and third codewords creates the fourth one.

2. The scheme in 2nd Table is also a linear block code.We can create all four codewords by XORing two other codewords.

Datawords	*Codewords*
00	000
01	011
10	101
11	110

Dataword	*Codeword*
00	00000
01	01011
10	10101
11	11110

Note

A simple parity-check code is a single-bit error-detecting code in which $n = k + 1$ with $d_{min} = 2$.

Even parity ensures that a codeword has an even number of 1's and odd parity ensures that there are an odd number of 1's in the codeword

Note

A simple parity-check code can detect an odd number of errors.

Note

All Hamming codes having $d_{min} = 3$ will detect 2 bit errors and will correct 1-bit error.

A codeword consists of **n** bits of which **k** are data bits and **r** are check bits.

Let $m = r$, then we have: $n = 2^m - 1$

and $k = n - m$

Two-dimensional parity-check code

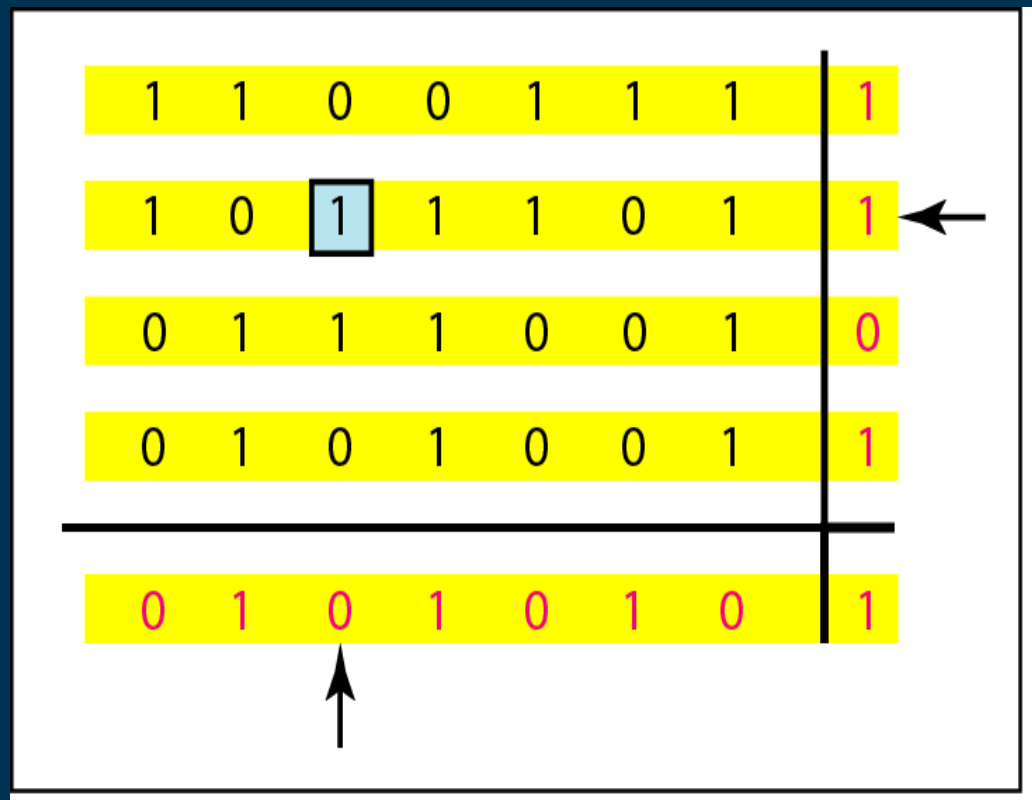

b. One error affects two parities

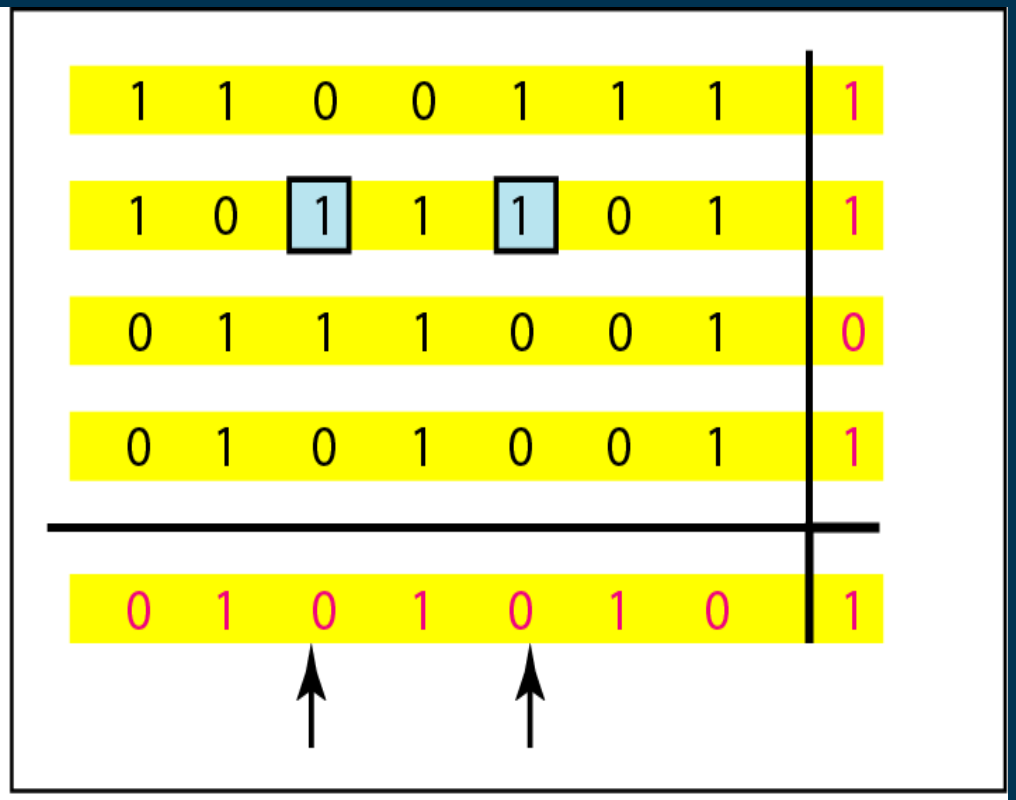

c. Two errors affect two parities

Two-dimensional parity-check code

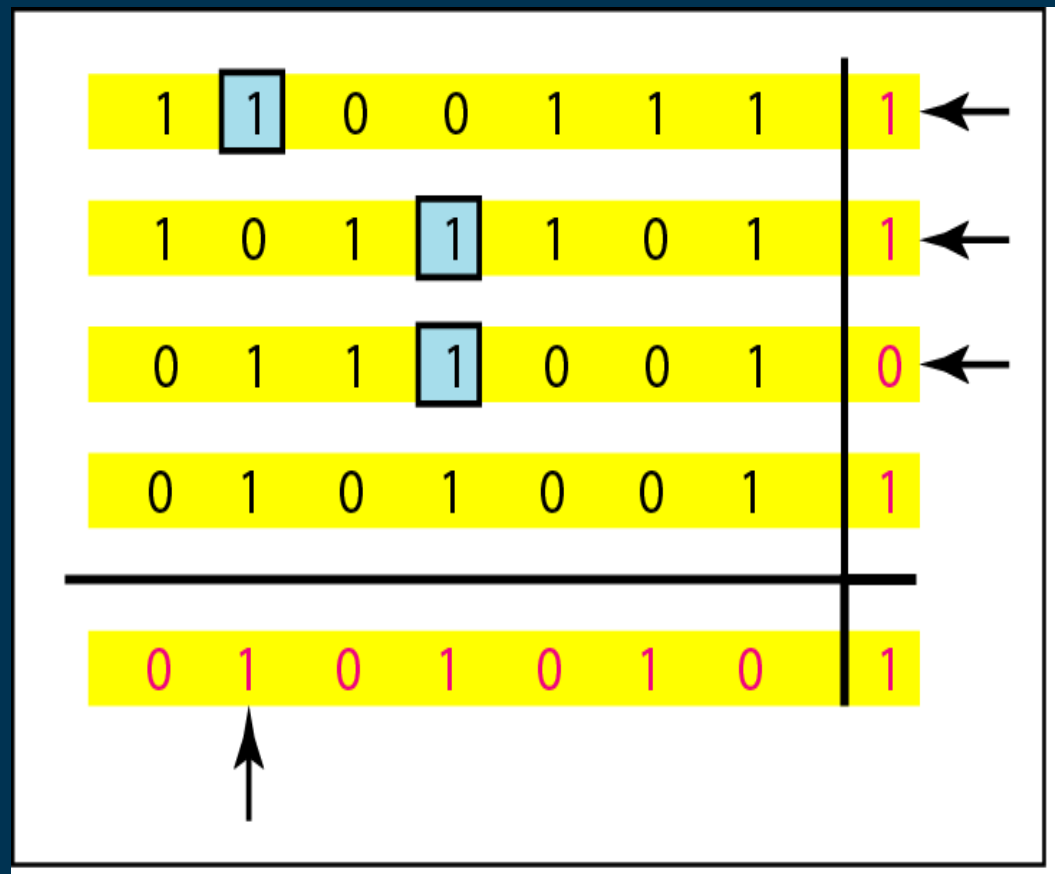

d. Three errors affect four parities

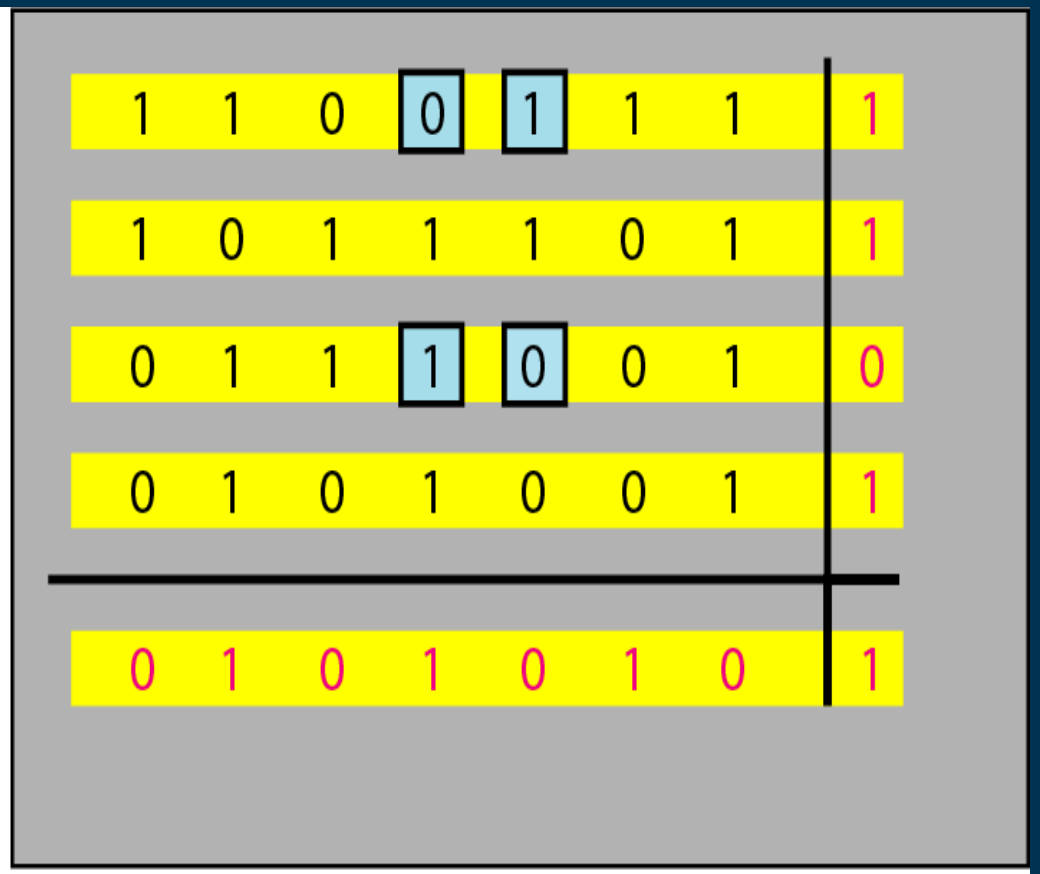

e. Four errors cannot be detected

Hamming code C(7, 4) - n=7, k = 4

Datawords	*Codewords*	*Datawords*	*Codewords*
0000	0000000	1000	1000110
0001	0001101	1001	1001011
0010	0010111	1010	1010001
0011	0011010	1011	1011100
0100	0100011	1100	1100101
0101	0101110	1101	1101000
0110	0110100	1110	1110010
0111	0111001	1111	1111111

Calculating the parity bits at the transmitter:

Modulo 2 arithmetic:

$r_0 = a_2 + a_1 + a_0$

$r_1 = a_3 + a_2 + a_1$

$r_2 = a_1 + a_0 + a_3$

Calculating the syndrome at the receiver:

$s_0 = b_2 + b_1 + b_0$

$s_1 = b_3 + b_2 + b_1$

$s_2 = b_1 + b_0 + b_3$

The structure of the encoder and decoder for a Hamming code

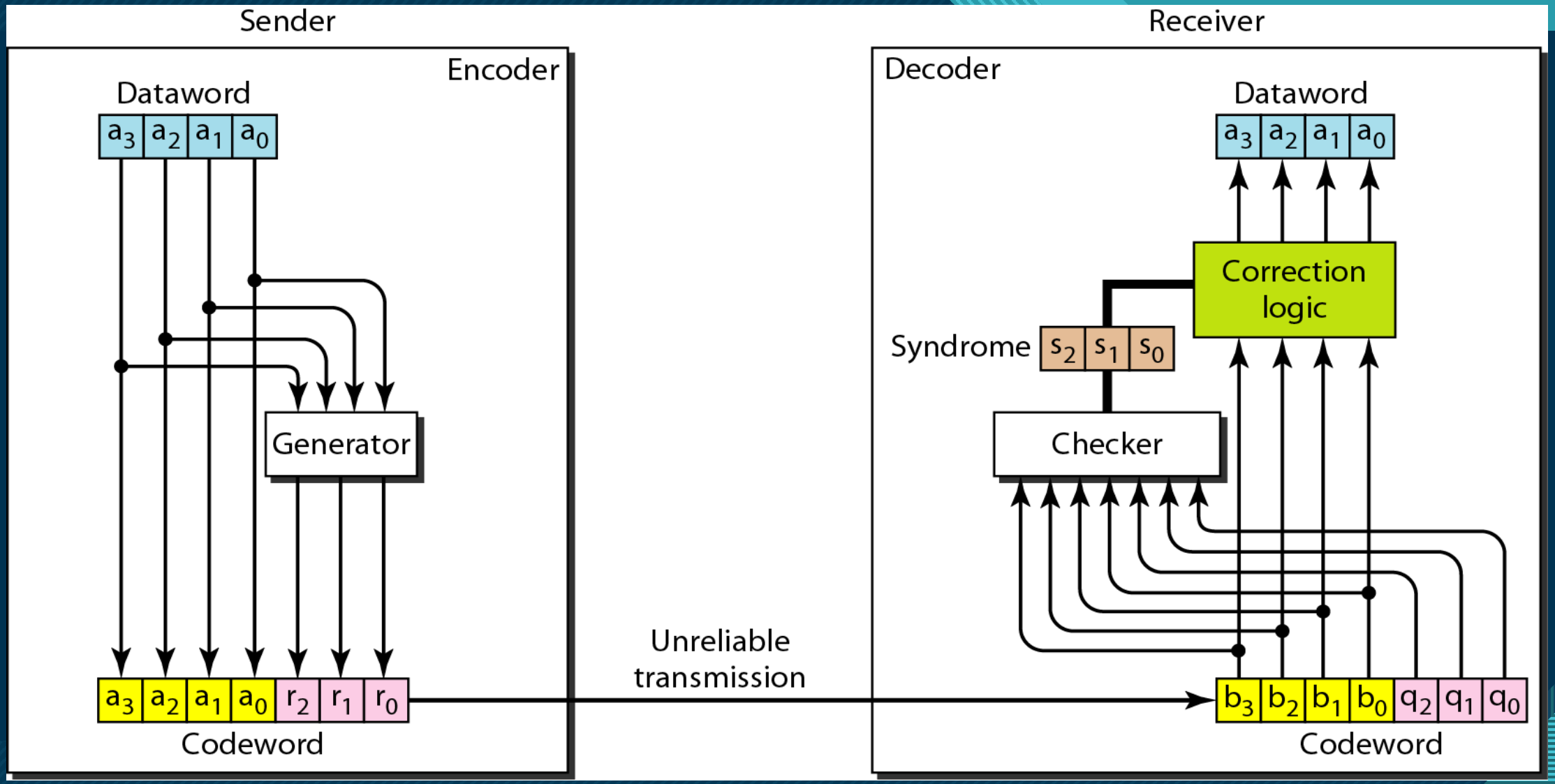

Logical decision made by the correction logic analyzer

Syndrome	000	001	010	011	100	101	110	111
Error	None	q_0	q_1	b_2	q_2	b_0	b_3	b_1

Example

Let us trace the path of three datawords from the sender to the destination:

1. The dataword 0100 becomes the codeword 0100011. The codeword 0100011 is received. The syndrome is 000, the final dataword is 0100.

2. The dataword 0111 becomes the codeword 0111001. The received codeword is: 0011001. The syndrome is 011. After flipping b_2 (changing the 1 to 0), the final dataword is 0111.

3. The dataword 1101 becomes the codeword 1101000. The syndrome is 101. After flipping b_0, we get 0000, the wrong dataword. This shows that our code cannot correct two errors.

Burst Errors

- Burst errors are very common, in particular in wireless environments where a fade will affect a group of bits in transit. The length of the burst is dependent on the duration of the fade.
- One way to counter burst errors, is to break up a transmission into shorter words and create a block (one word per row), then have a parity check per word.
- The words are then sent column by column. When a burst error occurs, it will affect 1 bit in several words as the transmission is read back into the block format and each word is checked individually.

Burst error correction using Hamming code

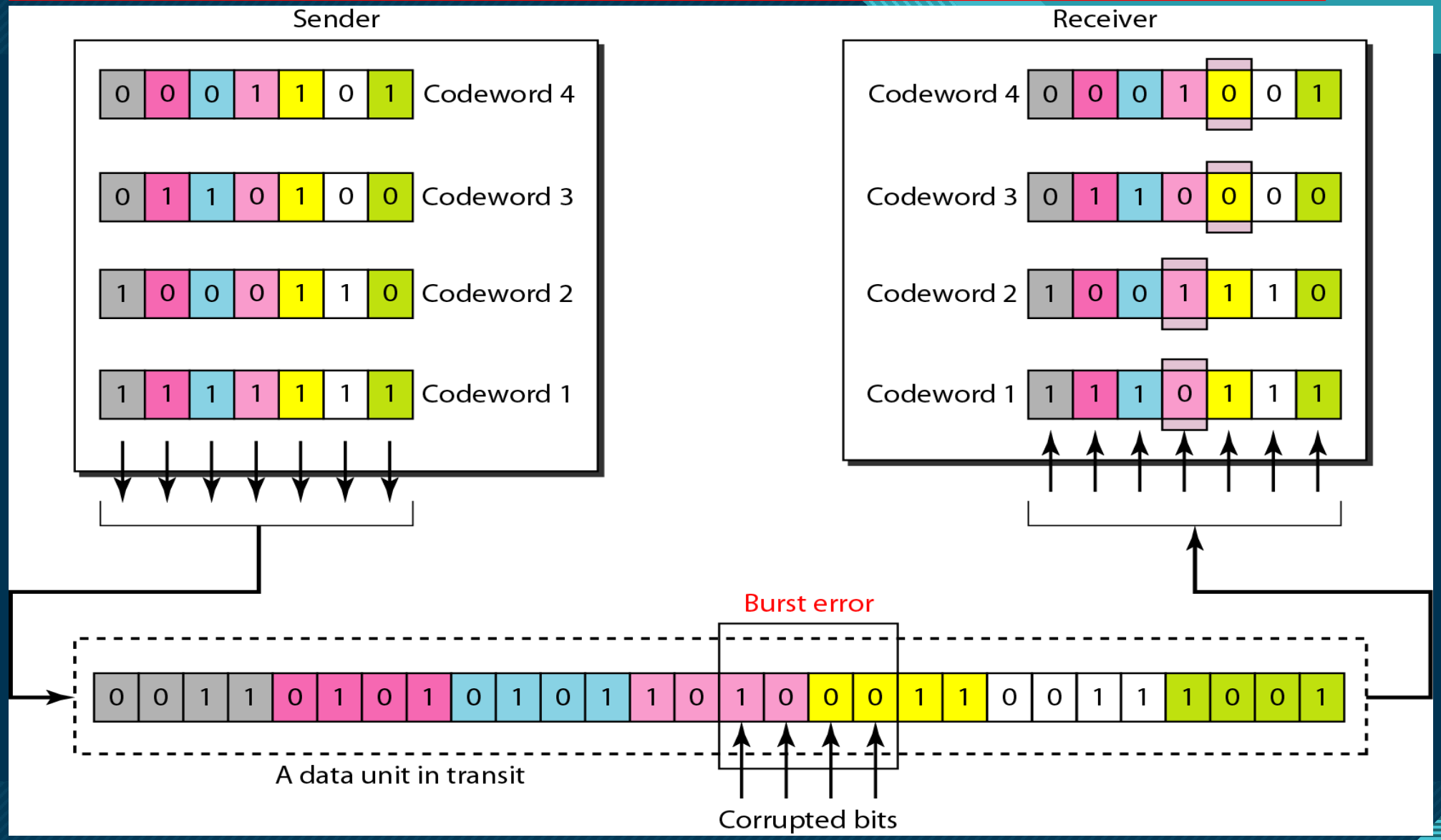

CYCLIC CODES

Cyclic codes are special linear block codes with one extra property. In a cyclic code, if a codeword is cyclically shifted (rotated), the result is another codeword.

A CRC code with C(7, 4)

Dataword	*Codeword*	*Dataword*	*Codeword*
0000	0000000	1000	1000101
0001	0001011	1001	1001110
0010	0010110	1010	1010011
0011	0011101	1011	1011000
0100	0100111	1100	1100010
0101	0101100	1101	1101001
0110	0110001	1110	1110100
0111	0111010	1111	1111111

CRC encoder and decoder

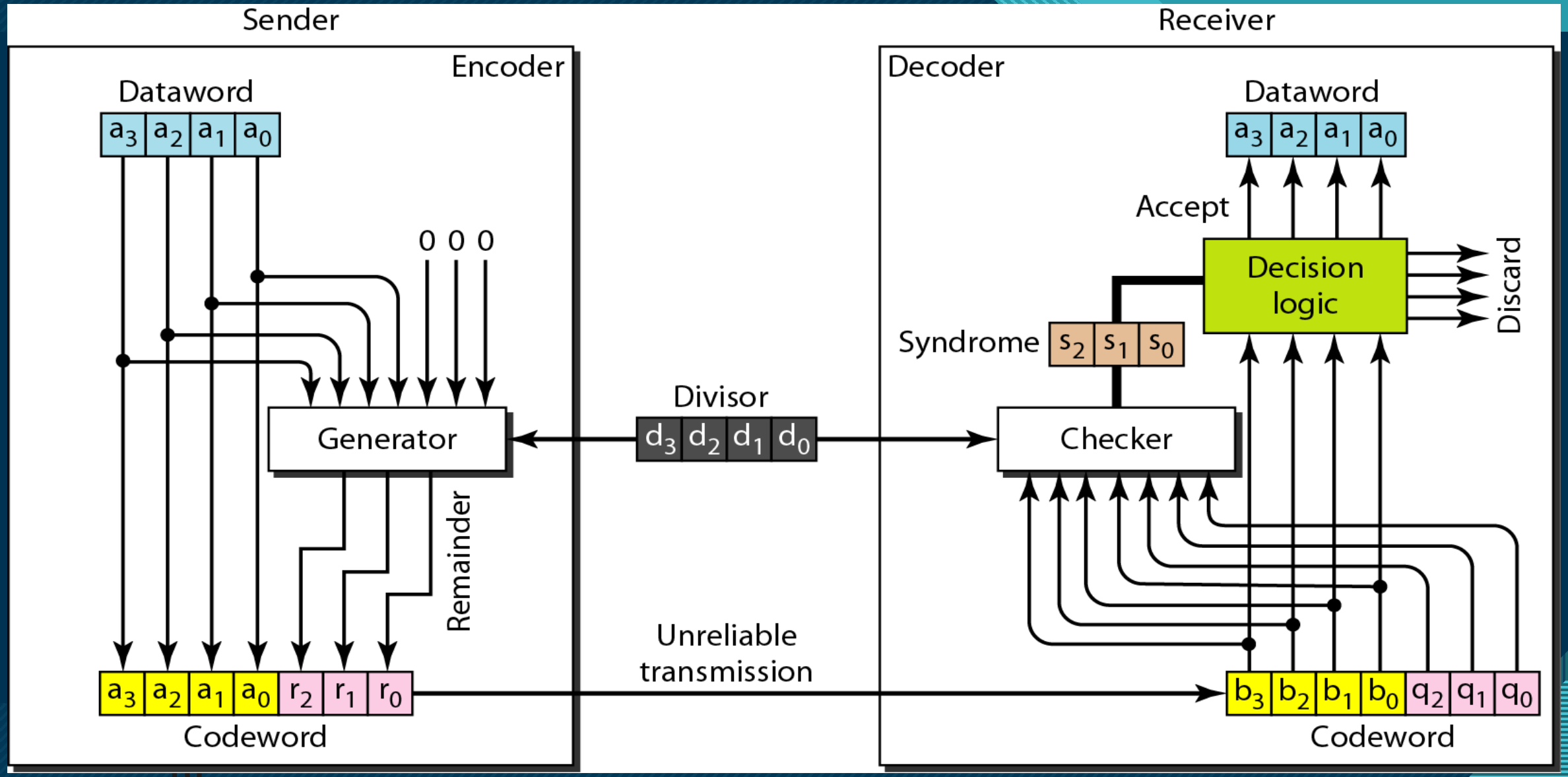

Division in CRC encoder

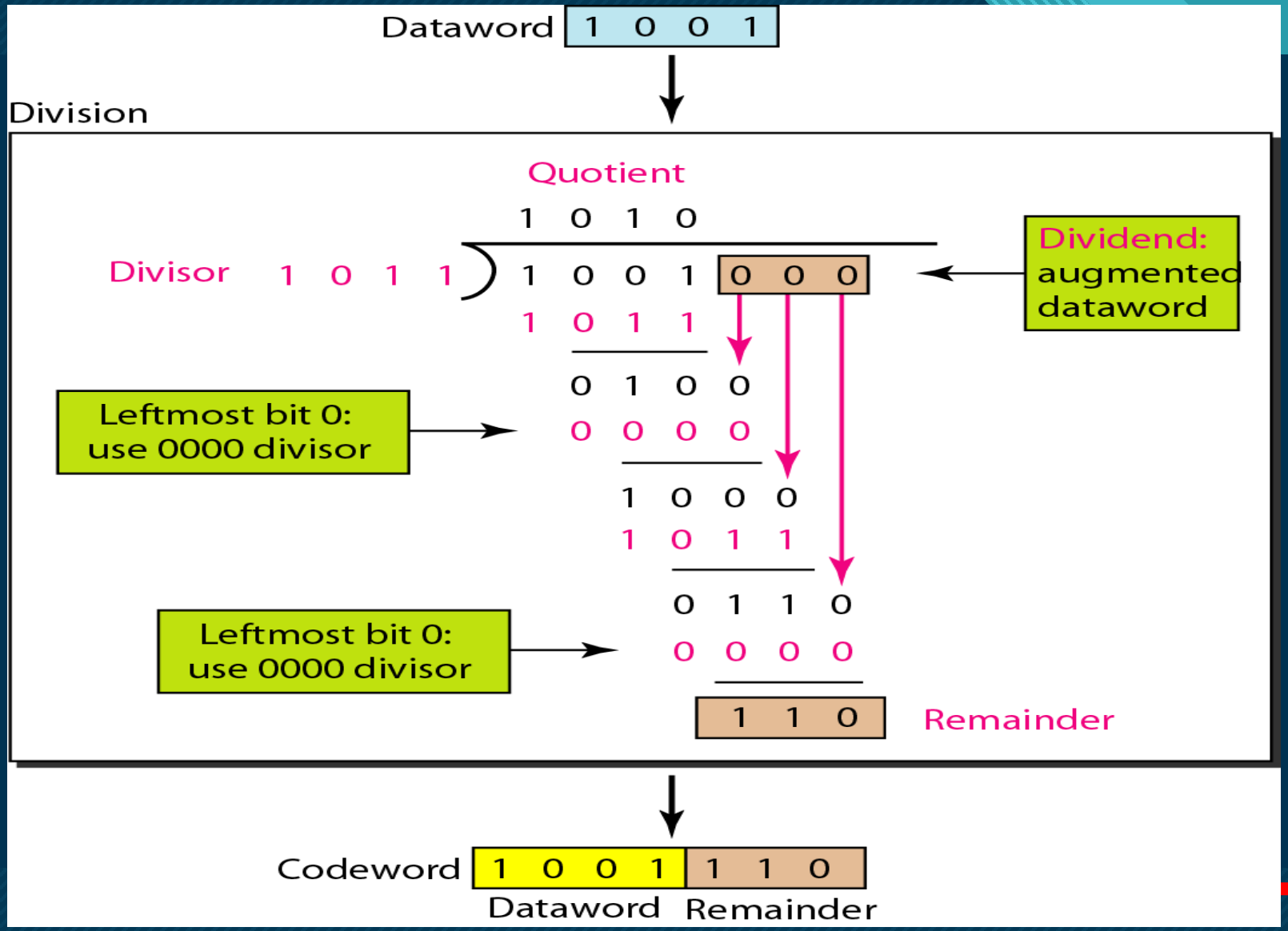

Division in the CRC decoder for two cases

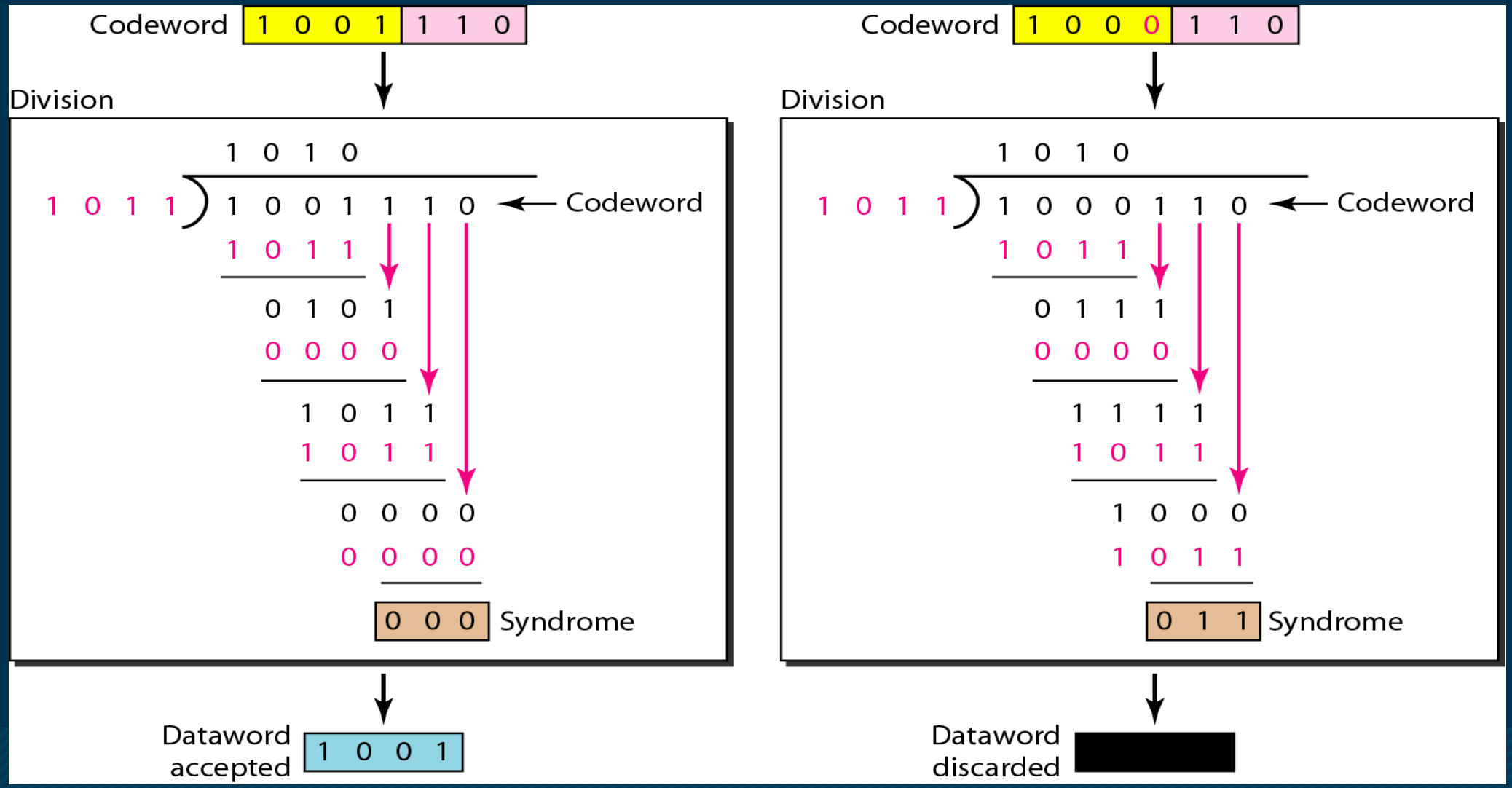

Using Polynomials

- We can use a polynomial to represent a binary word.
- Each bit from right to left is mapped onto a power term.
- The rightmost bit represents the “0” power term. The bit next to it the “1” power term, etc.
- If the bit is of value zero, the power term is deleted from the expression.

A polynomial to represent a binary word

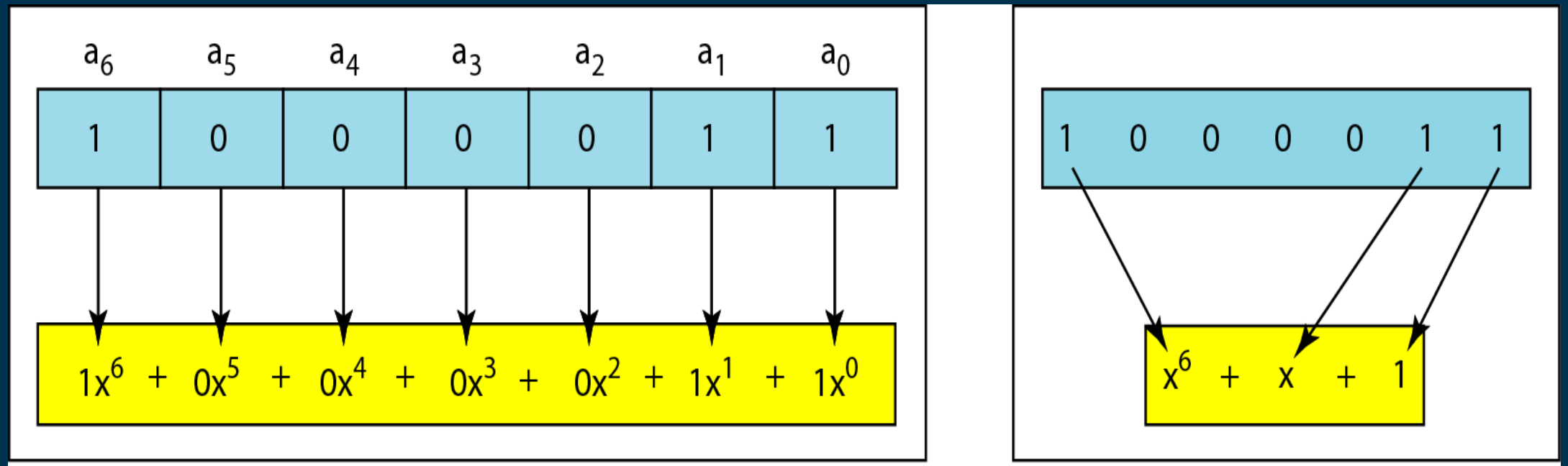

a. Binary pattern and polynomial

b. Short form

CRC division using polynomials

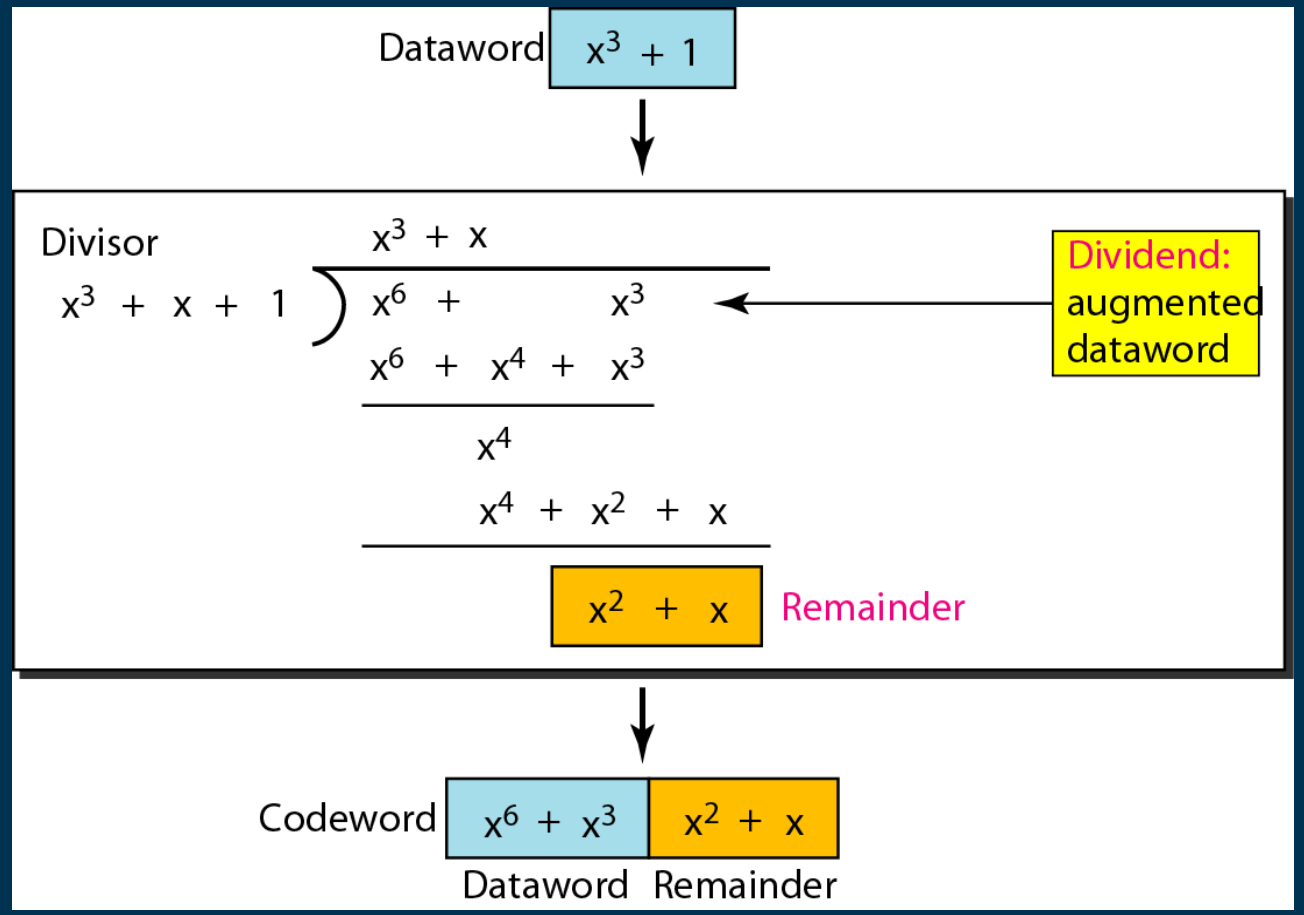

Note

The divisor in a cyclic code is normally called the generator polynomial or simply the generator.

Note

In a cyclic code,

If $s(x) \neq 0$, one or more bits is corrupted.

If $s(x) = 0$, either

a. No bit is corrupted. or

b. Some bits are corrupted, but the decoder failed to detect them.

Note

In a cyclic code, those *e*(x) errors that are divisible by *g*(x) are not caught.

Received codeword (c(x) + e(x))/g(x) = c(x)/g(x) + e(x)/g(x)

The first part is by definition divisible the second part will determine the error. If "0" conclusion -> no error occurred.

Note: that could mean that an error went undetected.

Note

If the generator has more than one term and the coefficient of x^0 is 1, all single errors can be caught.

Example

Which of the following g(x) values guarantees that a single-bit error is caught? For each case, what is the error that cannot be caught?

a. $x + 1$ b. x^3 c. 1

Solution

a. No x^i can be divisible by $x + 1$. Any single-bit error can be caught.

b. If i is equal to or greater than 3, x^i is divisible by g(x).
All single-bit errors in positions 1 to 3 are caught.

c. All values of i make x^i divisible by g(x). No single-bit error can be caught. This g(x) is useless.

Representation of two isolated single-bit errors using polynomials

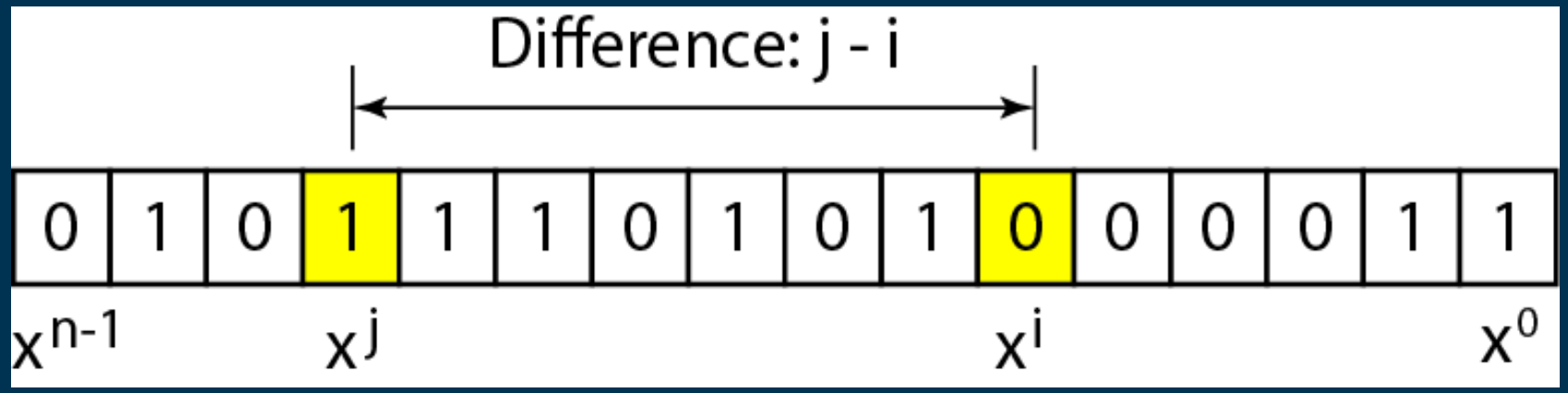

Note

If a generator cannot divide $x^t + 1$ (t between 0 and n – 1), then all isolated double errors can be detected.

Example

Find the status of the following generators related to two isolated, single-bit errors.

a. $x + 1$ b. $x^4 + 1$ c. $x^7 + x^6 + 1$ d. $x^{15} + x^{14} + 1$

Solution

a. This is a very poor choice for a generator. Any two errors next to each other cannot be detected.

b. This generator cannot detect two errors that are four positions apart.

c. This is a good choice for this purpose.

d. This polynomial cannot divide $x^t + 1$ if t is less than 32,768. A codeword with two isolated errors up to 32,768 bits apart can be detected by this generator.

Note

A generator that contains a factor of $x + 1$ can detect all odd-numbered errors.

Note

- All burst errors with $L \le r$ will be detected.
- All burst errors with $L = r + 1$ will be detected with probability $1 - (1/2)^{r-1}$.
- All burst errors with $L > r + 1$ will be detected with probability $1 - (1/2)^{r}$.

Example

Find the suitability of the following generators in relation to burst errors of different lengths.

a. $x^6 + 1$ **b.** $x^{18} + x^7 + x + 1$ **c.** $x^{32} + x^{23} + x^7 + 1$

Solution

a. This generator can detect all burst errors with a length less than or equal to 6 bits; 3 out of 100 burst errors with length 7 will slip by; 16 out of 1000 burst errors of length 8 or more will slip by.

b. This generator can detect all burst errors with a length less than or equal to 18 bits; 8 out of 1 million burst errors with length 19 will slip by; 4 out of 1 million burst errors of length 20 or more will slip by.

c. This generator can detect all burst errors with a length less than or equal to 32 bits; 5 out of 10 billion burst errors with length 33 will slip by; 3 out of 10 billion burst errors of length 34 or more will slip by.

Note

A good polynomial generator needs to have the following characteristics:

1. It should have at least two terms.
2. The coefficient of the term x^0 should be 1.
3. It should not divide $x^t + 1$, for t between 2 and $n - 1$.
4. It should have the factor $x + 1$.

Name	*Polynomial*	*Application*
CRC-8	$x^8 + x^2 + x + 1$	ATM header
CRC-10	$x^{10} + x^9 + x^5 + x^4 + x^2 + 1$	ATM AAL
CRC-16	$x^{16} + x^{12} + x^5 + 1$	HDLC
CRC-32	$x^{32} + x^{26} + x^{23} + x^{22} + x^{16} + x^{12} + x^{11} + x^{10} + x^8 + x^7 + x^5 + x^4 + x^2 + x + 1$	LANs

CHECKSUM

The last error detection method is called the checksum.

The checksum is used in the Internet by several protocols although not at the data link layer. However, we briefly discuss it here to complete our discussion on error checking

Example

Suppose our data is a list of five 4-bit numbers that we want to send to a destination.

In addition to sending these numbers, we send the sum of the numbers.

For example, if the set of numbers is (7, 11, 12, 0, 6), we send (7, 11, 12, 0, 6, 36), where 36 is the sum of the original numbers. The receiver adds the five numbers and compares the result with the sum. If the two are the same, the receiver assumes no error, accepts the five numbers, and discards the sum. Otherwise, there is an error somewhere and the data are not accepted.

Example

We can make the job of the receiver easier if we send the negative (complement) of the sum, called the checksum.

In this case, we send (7, 11, 12, 0, 6, −36). The receiver can add all the numbers received (including the checksum). If the result is 0, it assumes no error; otherwise, there is an error.

Example

How can we represent the number 21 in one's complement arithmetic using only four bits?

Solution

The number 21 in binary is 10101 (it needs five bits). We can wrap the leftmost bit and add it to the four rightmost bits. We have (0101 + 1) = 0110 or 6.

Example

How can we represent the number −6 in one's complement arithmetic using only four bits?

Solution

In one's complement arithmetic, the negative or complement of a number is found by inverting all bits. Positive 6 is 0110; negative 6 is 1001. If we consider only unsigned numbers, this is 9. In other words, the complement of 6 is 9. Another way to find the complement of a number in one's complement arithmetic is to subtract the number from $2^n - 1$ (16 − 1 in this case).

Example

Let us redo previous Exercise using one's complement arithmetic.

Figure shows the process at the sender and at the receiver.

36 cannot be expressed in 4 bits. The extra two bits are wrapped and added with the sum to create the wrapped sum value 6. In the figure, we have shown the details in binary. The sum is then complemented, resulting in the checksum value 9 (15 − 6 = 9). The sender now sends six data items to the receiver including the checksum 9.

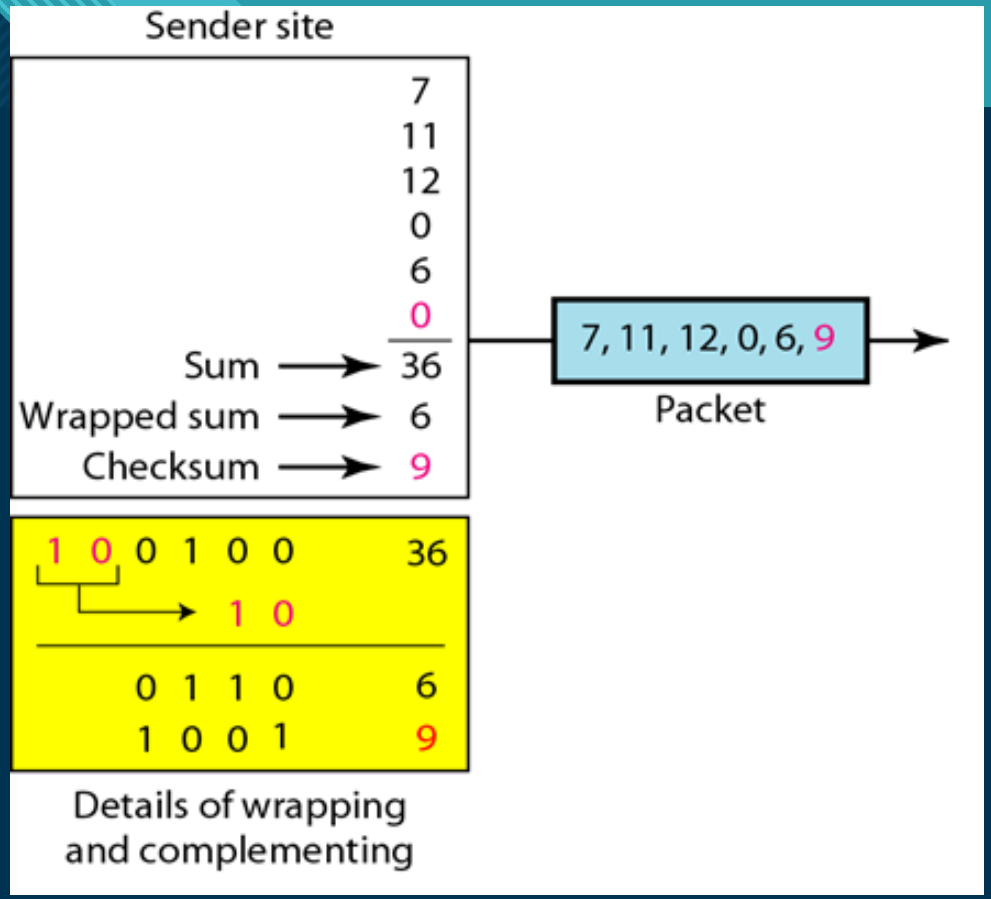

Example (contd…)

The receiver follows the same procedure as the sender. It adds all data items (including the checksum); the result is 45. The sum is wrapped and becomes 15. The wrapped sum is complemented and becomes 0. Since the value of the checksum is 0, this means that the data is not corrupted. The receiver drops the checksum and keeps the other data items. If the checksum is not zero, the entire packet is dropped.

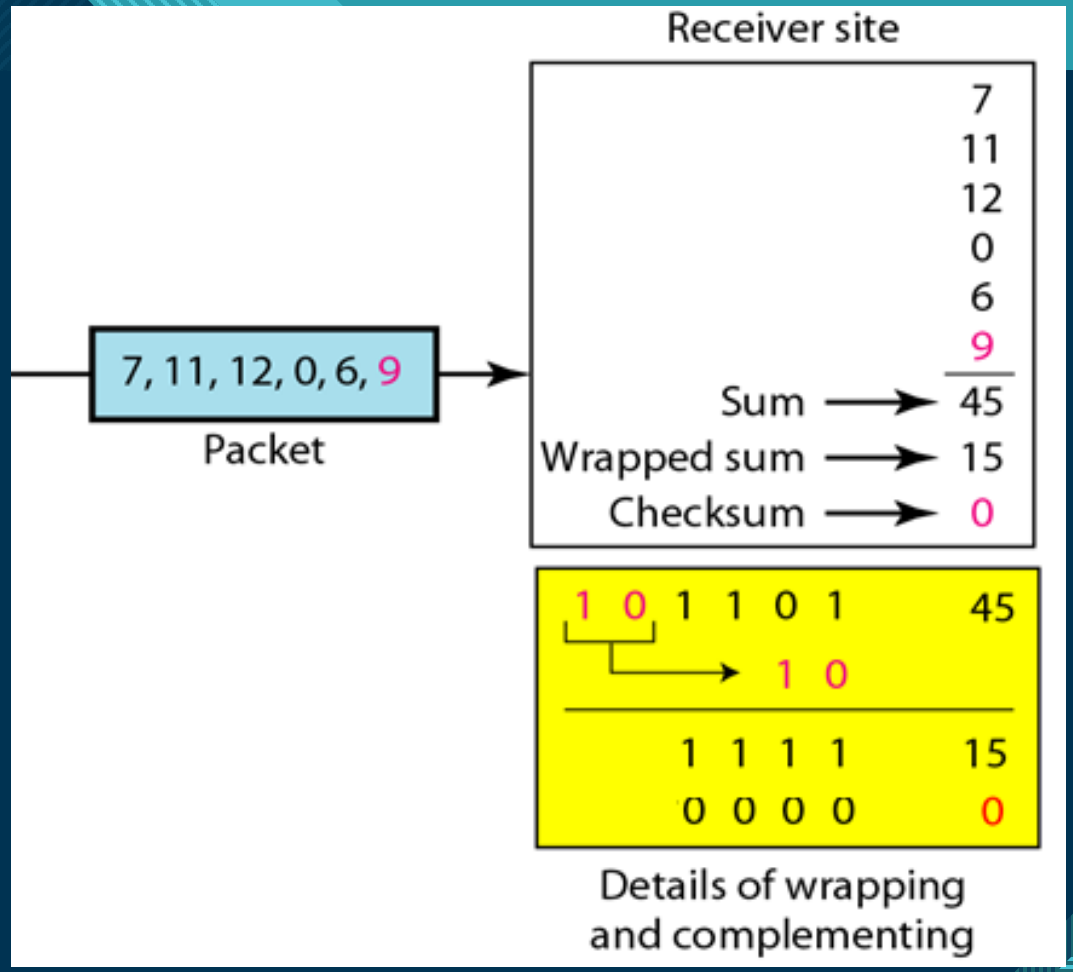

Note

Sender site:

1. The message is divided into 16-bit words.
2. The value of the checksum word is set to 0.
3. All words including the checksum are added using one's complement addition.
4. The sum is complemented and becomes the checksum.
5. The checksum is sent with the data.

Note

Receiver site:

1. The message (including checksum) is divided into 16-bit words.
2. All words are added using one's complement addition.
3. The sum is complemented and becomes the new checksum.
4. If the value of checksum is 0, the message is accepted; otherwise, it is rejected.

Example

Let us calculate the checksum for a text of 8 characters (“Forouzan”). The text needs to be divided into 2-byte (16-bit) words. We use ASCII to change each byte to a 2-digit hexadecimal number. For example, F is represented as 0x46 and o is represented as 0x6F. Figure shows how the checksum is calculated at the sender and receiver sites. In part a of the figure, the value of partial sum for the first column is 0x36. We keep the rightmost digit (6) and insert the leftmost digit (3) as the carry in the second column. The process is repeated for each column. Note that if there is any corruption, the checksum recalculated by the receiver is not all 0s. We leave this an exercise.

1	0	1	3	Carries
4	6	6	F	(Fo)
7	2	6	7	(ro)
7	5	7	A	(uz)
6	1	6	E	(an)
0	0	0	0	Checksum (initial)
8	F	C	6	Sum (partial)
			1	
8	F	C	7	Sum
7	0	3	8	Checksum (to send)

a. Checksum at the sender site

1	0	1	3	Carries
4	6	6	F	(Fo)
7	2	6	7	(ro)
7	5	7	A	(uz)
6	1	6	E	(an)
7	0	3	8	Checksum (received)
F	F	F	E	Sum (partial)
			1	
8	F	C	7	Sum
0	0	0	0	Checksum (new)

a. Checksum at the receiver site